2000 SERIES – P2200

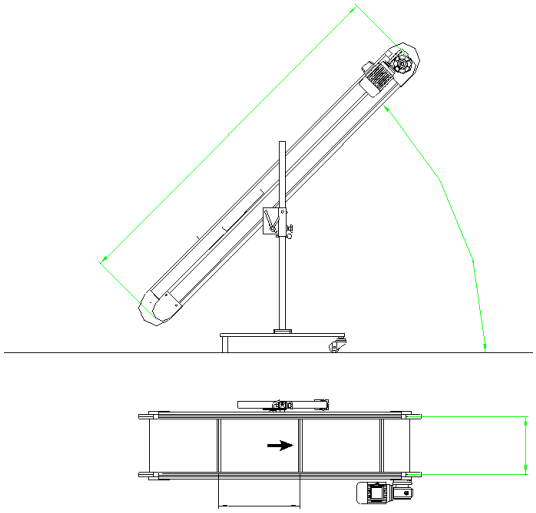

PLSE Series – Technical Specification

Description	Incline Plastic Belt Conveyor with hopper
Incline range	Adjustment devices 0°÷ 55°
Frame	6060 anodized extruded aluminium profile 117x25mm
Joint profile	6060 Extruded aluminium profile 46x27mm
Belt sliding guides	Nylon
Sides	Anodized aluminium sides h70mm
Legs	Perforated zinc plated steel legs 35x35x950mm with base, vertical and incline adjustment
End of legs	Revolving wheels Ø 60mm (with brake on request)
Belt	PP belt (125℃) or PA belt (165℃), light grey, equ ipped with 26mm high side walls that are integral part of the belt and move along with the belt
Cleats	PU black or white (FDA) / H=20/30/50mm / Pitch = 378mm (width 200÷500), 630mm (width 550÷1500)
Traction	Galvanized metal hexagonal drive shaft 27mm, PP cogwheels Z=8
Drive	Direct drive with torque limiter
Asynchronous Motor	3PH 4poli (1360rpm) IP55 with fan – 400Vac/50Hz
Power	0,09KW - 0,18KW - 0,25KW - 0,37KW
Gear box with permanent Lubrication / Speed	1/30 13m/m - 1/60 7m/m - 1/100 4m/m
Control Panel	IP55, thermal overload protected motor starter (on/off), emergency button, five cores (5x1,5mm) cable length 3000mm flame-retardant

PL MACHINERY SERVICES & SALES LTD
UNIT A3/A4 BARTON INDUSTRIAL ESTATE, FALDO ROAD,
BARTON LE CLAY, BEDFORDSHIRE, MK45 4RP
TEL: 01582 883666 / EMAIL: sales@plmachinery.com